GENERAC® Portable Products by Briggs & Stratton® POWER PRODUCTS

WheelHouse™ 5500 RATED WATTS

PORTABLE GENERATOR

Owner's Manual

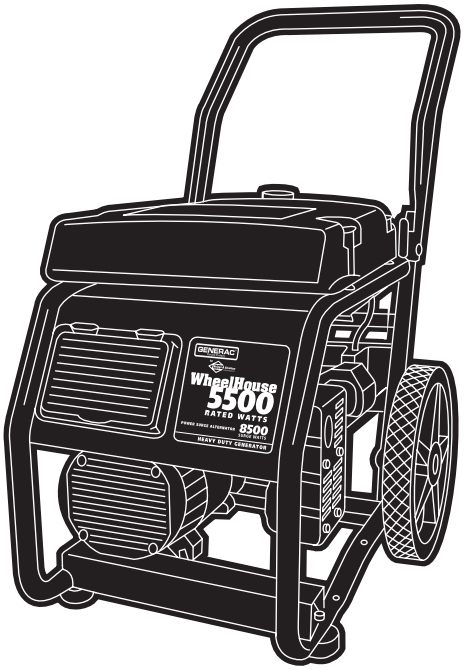

Parts Included*

- Generator
- Wheel kit
- Locking 30 Amp plug
- Engine oil
- Two packets of fuel stabilizer
- Owner's manual
- Engine manual

*If any parts are missing or damaged, call 1-800-270-1408.

Table of Contents

Questions? Help is just a moment away!

Call: **Generac Generator Helpline - 1-800-270-1408** M-F 8-5 CT

Web: **www.generac-portables.com** or **www.briggsandstratton.com**

This is the safety alert symbol. It is used to alert you to potential personal injury hazards. Obey all safety messages that follow this symbol to avoid possible injury or death.

Model No. 1646-0 (5,500 Watt AC Generator) Manual No. 189628GS Revision 1 (08/24/2001)

EQUIPMENT DESCRIPTION

This generator is an engine–driven, revolving field, alternating current (AC) generator. It was designed to supply electrical power for operating compatible electrical lighting, appliances, tools and motor loads. This generator features a Command Central™ control panel which provides 5 outlets and circuit breakers in one location.

This manual contains information for a generator that operates 120 and/or 240 Volt, single phase, 60 Hz devices that require up to 5,500 watts (5.5 kW) of power that pull up to 45.8 Amps at 120 Volts or 22.9 Amps at 240 Volts.

CAUTION! Do Not exceed the generator's wattage/amperage capacity. Add up the rated watts of all devices you are connecting to generator receptacles at one time. This total should not be greater than 5,500 watts. See "Don't Overload the Generator" on page 9.

The generator's revolving field is driven at about 3,600 rpm by a single-cylinder engine.

Every effort has been made to ensure that information in this manual is accurate and current. However, Generac reserves the right to change, alter or otherwise improve the product and this document at any time without prior notice.

CAUTION! Do Not tamper with engine governed speed. High operating speeds are dangerous and increase risk of personal injury or damage to equipment. The generator supplies correct rated frequency and voltage only when running at proper governed speed. Incorrect frequency and/or voltage can damage some connected electrical loads. Operating at excessively low speeds imposes a heavy load. When adequate engine power is not available engine life may be shortened.

The Emission Control System for this generator is warranted for standards set by the Environmental Protection Agency. For warranty information refer to the engine owner's manual.

SAFETY RULES

This generator set was designed and manufactured for specific applications. **Do Not** attempt to modify the unit or use it for any application it was not designed for. If you have any questions about your generator's application, ask your dealer or consult the factory.

The manufacturer could not possibly anticipate every circumstance that might involve a hazard. For that reason warnings in the manual and warnings on tags or decals affixed to the unit are not all–inclusive. If you intend to handle, operate or service the unit by a procedure or method not specifically recommended by the manufacturer, first make sure that such a procedure or method will not render this equipment unsafe or pose a threat to you and others.

Read this manual carefully and become familiar with your generator set. Know its applications, its limitations and any hazards involved.

WARNING:

The engine exhaust from this product contains chemicals known to the State of California to cause cancer, birth defects, or other reproductive harm.

WARNING! You must isolate the generator from the electric utility using approved transfer equipment if this unit is used for backup power. **Failure to isolate the generator from the power utility may result in injury or death to electric utility workers and damage to the generator** due to a backfeed of electrical energy. Whenever the unit is providing backup power, the electric utility must be notified.

DANGER! Generator exhaust gases contain DEADLY carbon monoxide gas. If breathed in sufficient concentrations, carbon monoxide can cause unconsciousness or death. Operate this equipment outdoors where adequate ventilation is available.

- The generator produces a very powerful voltage that can cause serious injury or death by electrocution. **Never** touch bare wires or receptacles. **Never** permit a child or any unqualified person to operate the generator.
- **Never** handle any kind of electrical cord or device while standing in water, while barefoot or while hands or feet are wet. Death or serious injury from electrocution may result.
- Use a ground fault circuit interrupter (GFCI) in any damp or highly conductive area (such as metal decking or steel work).
- **Never** use worn, bare, frayed or otherwise damaged electrical cords with the generator. Death, serious injury and property damage from electrical shock may result.
- **Gasoline is highly FLAMMABLE and its vapors are EXPLOSIVE. Never allow smoking, open flames, sparks or heat in the vicinity while handling gasoline.** Avoid spilling gasoline on a hot engine. Comply with all laws regulating storage and handling of gasoline.
- **Do Not** overfill the fuel tank. Always allow room for fuel expansion. **If tank is overfilled, fuel can overflow onto a hot engine and cause a FIRE or an EXPLOSION.**
- **Never** store a generator with fuel in the tank where gasoline vapors might reach an open flame, spark or pilot light (as on a furnace, water heater, clothes dryer). FIRE or an EXPLOSION may result.
- The unit requires an adequate flow of cooling air for its continued proper operation. **Never** operate the unit inside any room or enclosure where the free flow of cooling air into and out of the unit might be obstructed. Allow at least 2 feet of clearance on all sides of generator, even while operating unit outdoors, or you could damage the unit.
- **Never** start or stop the unit with electrical loads connected to receptacles with the connected devices turned ON. Start the engine and let it stabilize before connecting any electrical loads. Disconnect all electrical loads before shutting down the generator.
- **Do Not** insert any object through cooling slots of the engine. You could damage the unit or injure yourself.
- **Never operate the generator:**
  in rain; in any enclosed compartment; when connected electrical devices overheat; if electrical output is lost; if engine or generator sparks; if flame or smoke is observed while unit is running; if unit vibrates excessively.

GROUNDING THE GENERATOR

The National Electrical Code requires that the frame and external electrically conductive parts of this generator be properly connected to an approved earth ground. Local electrical codes may also require proper grounding of the unit. For that purpose, a GROUNDING WING NUT is provided on the generator end (Figure 1).

Figure 1 — Grounding Wing Nut

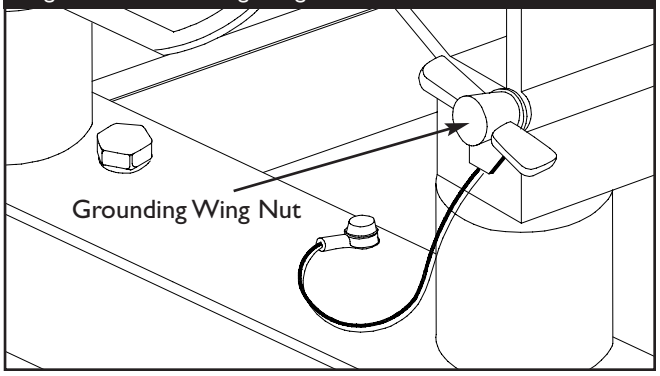

Generally, connecting a No. 12 AWG (American Wire Gauge) stranded copper wire to the grounding wing nut and to an earth–driven copper or brass grounding rod (electrode) provides adequate protection against electrical shock. Be careful to keep the grounding wire attached after connecting the stranded copper wire. However, local codes may vary widely. Consult with a local electrician for grounding requirements in your area.

Properly grounding the generator helps prevent electrical shock if a ground fault condition exists in the generator or in connected electrical devices. Proper grounding also helps dissipate static electricity, which often builds up in ungrounded devices.

Your generator requires some assembly and is ready for use after it has been properly serviced with the recommended oil and fuel. If you have any problems with the assembly of your generator, please call the generator helpline at 1-800-270-1408.

REMOVE GENERATOR FROM CARTON

- Set the carton on a rigid flat surface with "This Side Up" arrows pointing upward.
- Carefully open the top flaps of the shipping carton.
- Cut carton corners from top to bottom at end of carton near wheels. Lay that side of carton down flat.
- Remove all packing material, carton fillers, etc.
- Roll the generator out of the shipping carton.

BEFORE STARTING THE ENGINE

Secure Handle

Secure the handle using the following steps:

- Loosen knobs of the handle.
- Raise the handle.
- Insert handle pins, if equipped (P/N B4135).
- Hand tighten knobs.

Add Oil

CAUTION! Any attempt to crank or start the engine before it has been properly filled with the recommended oil may result in an engine failure.

To fill your engine with oil:

- Place generator on a level surface.
- Use a long neck funnel OR remove the fuel tank as described in "Fuel Tank", when adding or changing oil.
- Follow the oil grade recommendations and oil fill instructions given in the engine owner's manual.

NOTE: The generator's revolving field rides on a prelubricated and sealed ball bearing that requires no additional lubrication for the life of the bearing.

Add Gasoline

WARNING! Never fill fuel tank indoors. **Never** fill fuel tank when engine is running or hot. Allow unit to cool for two minutes before refueling. **Do Not** light a cigarette or smoke when filling the fuel tank.

WARNING! Do Not overfill the fuel tank. See decal on tank.

- Use fresh, clean regular **UNLEADED** gasoline. **Do Not** use premium gasoline. **Do Not** mix oil with gasoline. **Never** use engine or carburetor cleaner products in the fuel tank.
- Clean area around fuel fill and remove fuel cap/gauge.
- Slowly add gasoline to fuel tank. Allow about 1.5" of tank space for fuel expansion (Figure 2).

Figure 2 — Typical Fuel Expansion Space

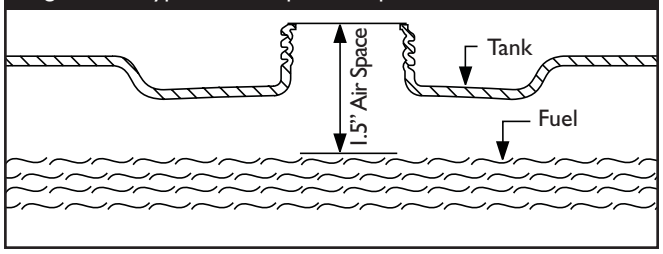

- Install fuel cap and permit any spilled gasoline to evaporate.

IMPORTANT: It is important to prevent gum deposits from forming in essential fuel system parts, such as the carburetor, fuel filter, fuel hose or tank during storage. Be sure to review "Storage" on page 11.

Fuel Tank

As is common with all plastic fuel containers, the removable fuel tank supplied with this generator may swell or expand due to build-up of fuel vapors when the vent knob is closed. This tank is designed and has been tested to safely withstand pressure-buildup. The 'ballooning' condition is relieved by turning the vent knob fully counterclockwise or loosening and retightening the fuel cap/gauge. When installing the tank on your generator, relieve tank pressure before tightening the four large plastic wing nuts.

IMPORTANT: The vent knob should be closed whenever you move the generator or transport the fuel tank.

1. Turn the vent knob fully clockwise on the fuel gauge to close it (Figure 3).

Figure 3 — Vent Knob

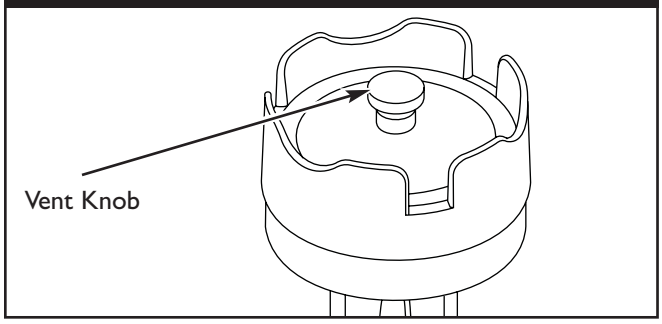

2. Turn the fuel shut off valve to the "**Off**" position (Figure 4).

Figure 4 — Fuel Shut-off Valve

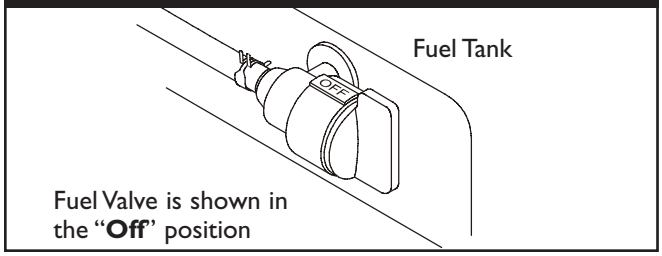

3. Disconnect the quick connect on the fuel line by pushing on the metal tab and twisting apart (Figure 5). Release the metal tab. Some fuel that is left in the line will spill out.

Figure 5 — Quick Connect

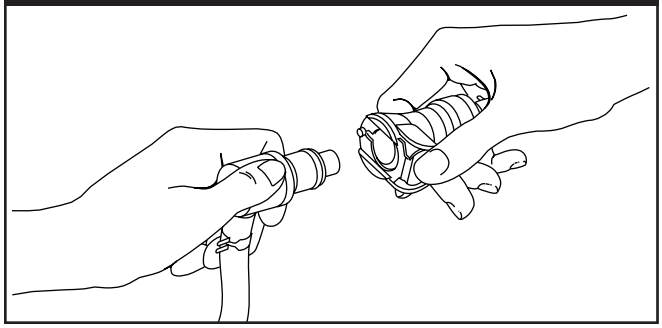

4. Remove the four large plastic wing nuts holding the tank onto the frame by turning them counter-clockwise (Figure 6).

Figure 6 — Plastic Tank Wing Nuts

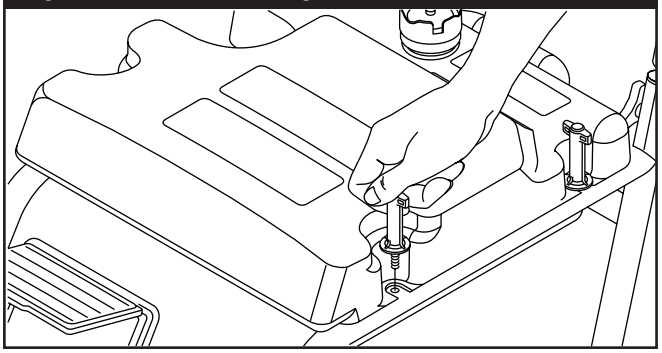

5. Lift off the fuel tank by grasping the handle (provided on the tank) with one hand and putting the other hand in the finger pocket (Figure 7). Lift the tank straight up.

Figure 7 — Lifting Off Fuel Tank

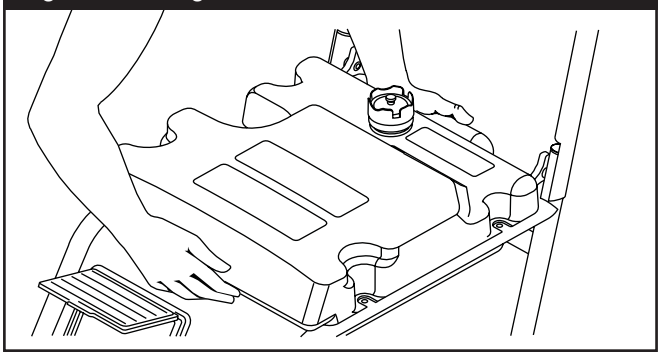

IMPORTANT: The fuel tank MUST be filled with it lying flat, not slanted or standing upright (Figure 8). **Do Not** let the fuel valve and quick connect come in contact with any dirt.

Figure 8 — Fuel Tank

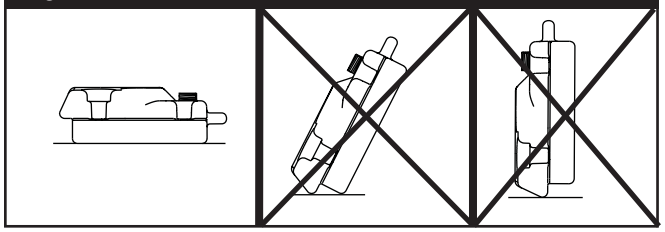

To place the fuel tank back on the unit, follow these same steps in reverse order. Make sure the four large plastic wing nuts are tightened securely.

IMPORTANT: Remove any dirt found inside the quick connect before putting the fuel tank back on the unit. **Make sure the vent knob is turned fully counter-clockwise to open it.** If you don't open it, fuel will not flow into the fuel line causing the unit to not start.

KNOW YOUR GENERATOR

Read this owner's manual and safety rules before operating your generator.
Compare the illustrations with your generator, to familiarize yourself with the locations of various controls and adjustments. Save this manual for future reference.

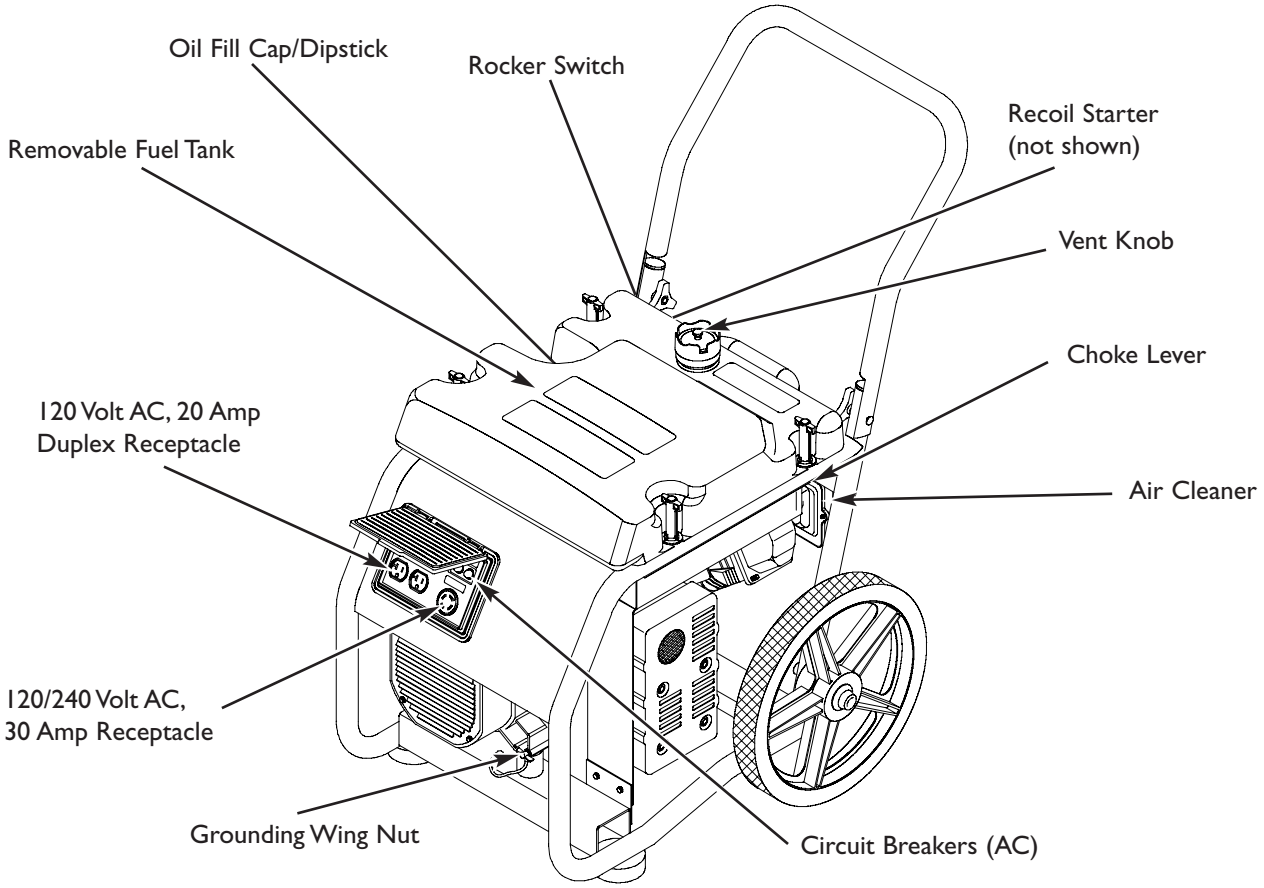

120 Volt AC, 20 Amp, Duplex Receptacle — May be used to supply electrical power for the operation of 120 Volt AC, 20 Amp, single phase, 60 Hz electrical lighting, appliance, tool and motor loads.

120/240 Volt AC, 30 Amp Locking Receptacle — May be used to supply electrical power for the operation of 120 and/or 240 Volt AC, 30 Amp, single phase, 60 Hz electrical lighting, appliance, tool and motor loads.

Air Cleaner — Uses a dry type filter element and foam pre–cleaner to limit the amount of dirt and dust sucked into the engine.

Choke Lever — Used when starting a cold engine.

Circuit Breakers (AC) — Each receptacle is provided with a "push to reset" circuit breaker to protect the generator against electrical overload.

Removable Fuel Tank — Capacity of five (5) U.S. gallons. Easily removed for convenient refueling.

Grounding Wing Nut — Used for proper grounding of unit.

Oil Fill Cap/Dipstick — Check and add oil to engine here.

Recoil starter — Used to start the engine.

Rocker Switch — Set this switch to "**On**" before using recoil starter. Set switch to "**Off**" to switch OFF engine.

Vent Knob — Must be open when generator is running.

OPERATING THE GENERATOR

CAUTION! Never start or stop unit with electrical loads connected AND with the connected devices turned ON.

Starting the Engine

Disconnect all electrical loads from the generator. Follow these start instruction steps in numerical order:

1. Make sure the fuel line quick connect is hooked up and that all four tank hold-downs are firmly tight.
2. Turn the vent knob fully counter-clockwise. See Figure 3 on page 5.
3. Rotate the fuel valve to the "**On**" position. See Figure 4 on page 5.
4. Move the choke lever to the "**Choke**" position (Figure 9). Your unit may appear slightly different from that shown here.

Figure 9 — Choke Lever

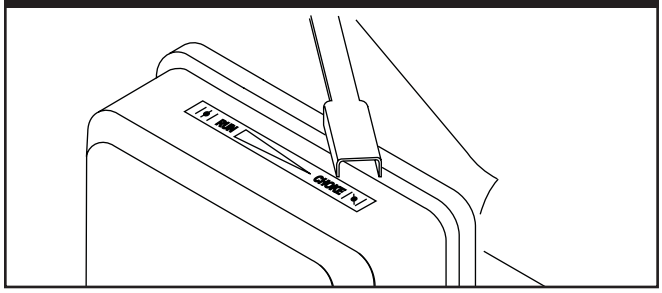

5. Set the rocker switch to "**On**" position (Figure 10).

Figure 10 — Rocker Switch

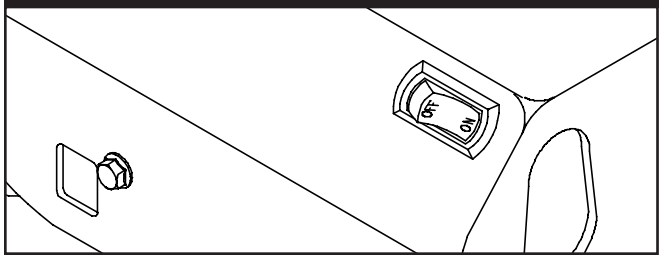

6. Grasp the recoil handle and pull slowly until slight resistance is felt. Then pull rapidly to start engine.
7. Move choke lever to "**Run**" position a short distance at a time over several seconds in warm weather or minutes in cold weather. Let engine run smoothly before each change. Operate with choke in "**Run**" position.

NOTE: If engine still fails to start after 3 pulls, check for proper oil level in crankcase. This unit is equipped with a low oil device that will not allow the engine to start. See engine manual.

Refer to the engine owner's manual for more detailed starting instructions.

Connecting Electrical Loads

- Let engine stabilize and warm up for a few minutes after starting.
- Plug in and turn on the desired 120 and/or 240 Volt AC, single phase, 60 Hz electrical loads.
- **Do Not** connect 240 Volt loads to the 120 Volt receptacles.
- **Do Not** connect 3–phase loads to the generator.
- **Do Not** connect 50 Hz loads to the generator.
- **DO NOT OVERLOAD THE GENERATOR.** See "Don't Overload the Generator" on page 9.

Stopping the Engine

- Unplug **all** electrical loads from generator panel receptacles. **Never** start or stop engine with electrical devices plugged in and turned on.
- Let engine run at no–load for 30 seconds to stabilize the internal temperatures of engine and alternator.
- Move rocker switch to "**Off**".
- Close the fuel shut–off valve.

RECEPTACLES

The control panel is equipped with a flip-up panel to keep the outlets clean and protected.

120 Volt AC, 20 Amp, Duplex Receptacle

Each receptacle (Figure 11) is protected against overload by a push–to–reset circuit breaker.

Figure 11 — 120 Volt AC, 20 Amp Duplex Receptacle

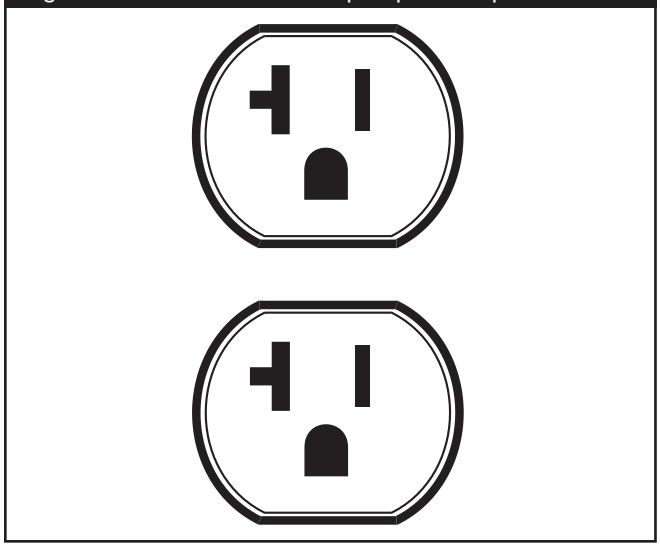

Use each receptacle to operate 120 Volt AC, single–phase, 60 Hz electrical loads requiring up to 2,400 watts (2.4 kW) at 20 Amps of current. Use cord sets that are rated for 125 Volt AC loads at 20 Amps (or greater).

120/240 Volt AC, 30 Amp, Locking Receptacle

Use a NEMA L14–30 plug with this receptacle. Connect a 4–wire cord set rated for 250 Volt AC loads at 30 Amps (or greater) (Figure 12). You can use the same 4–wire cord if you plan to run a 120 Volt load.

Figure 12 — 120/240 Volt AC, 30 Amp Receptacle

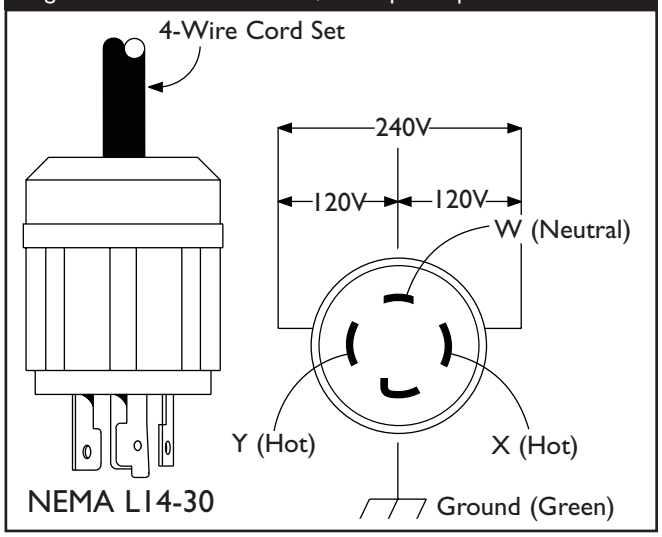

This receptacle powers 120/240 Volt AC, 60 Hz, single phase loads requiring up to 3,600 watts of power at 30 Amps for 120 Volts; 5,500 watts of power (5.5 kW) at 22.9 Amps for 240 Volts. The outlet is protected by a push–to–reset circuit breaker.

CAUTION! Although this outlet is rated for 120/240 Volt 30 Amp (up to 7,200 watts), the generator is only rated for 5,500 watts. Powering loads that exceed the wattage/amperage capacity of the generator can damage it or cause serious injuries. 240 Volt loads powered through this outlet should not exceed 22.9 Amps of current draw.

DON'T OVERLOAD YOUR GENERATOR

Capacity

You must make sure your generator can supply enough rated (running) and surge (starting) watts for the items you will power at the same time. Follow these simple steps:

1. Select the items you will power at the same time.
2. Total the rated (running) watts of these items. This is the amount of power your generator must produce to keep your items running. See Figure 13.
3. Estimate how many surge (starting) watts you will need. Surge wattage is the short burst of power needed to start electric motor-driven tools or appliances such as a circular saw or refrigerator. Because not all motors start at the same time, total surge watts can be estimated by adding only the item(s) with the highest additional surge watts to the total rated watts from step 2.

Example:

Tool or Appliance	Rated (Running) Watts	Additional Surge (Starting) Watts
Window Air Conditioner	1200	1800
Refrigerator	800	1600
Deep Freezer	500	500
Television	500	-
Light (75 Watts)	75	-
	3075 Total Running Watts	1800 Highest Surge Watts

Total Rated (Running) Watts = 3075
Highest Additional Surge Watts = 1800
Total Generator Output Required = 4875

Power Management

To prolong the life of your generator and attached devices, it is important to take care when adding electrical loads to your generator. There should be nothing connected to the generator outlets before starting it's engine. The correct and safe way to manage generator power is to sequentially add loads as follows:

1. With nothing connected to the generator, start the engine as described in this manual.
2. Plug in and turn on the first load, preferably the largest load you have.
3. Permit the generator output to stabilize (engine runs smoothly and attached device operates properly.
4. Plug in and turn on the next load.
5. Again, permit the generator to stabilize.
6. Repeat steps 4 and 5 for each additional load.

Never add more loads than the generator capacity. Take special care to consider surge loads in generator capacity, as described above.

Figure 13 - Wattage Reference Chart

Tool or Appliance	Rated* (Running) Watts	Additional Surge (Starting) Watts
Essentials		
Light Bulb - 75 watt	75	-
Deep Freezer	500	500
Sump Pump	800	1200
Refrigerator/Freezer - 18 Cu. Ft.	800	1600
Water Well Pump - 1/3 HP	1000	2000
Heating/Cooling		
Window AC - 10,000 BTU	1200	1800
Window Fan	300	600
Furnace Fan Blower - 1/2 HP	800	1300
Kitchen		
Microwave Oven - 1000 Watt	1000	-
Coffee Maker	1500	-
Electric Stove - Single Element	1500	-
Hot Plate	2500	-
Family Room		
DVD/CD Player	100	-
VCR	100	-
Stereo Receiver	450	-
Color Television - 27”	500	-
Personal Computer w/17” monitor	800	-
Other		
Security System	180	-
AM/FM Clock Radio	300	-
Garage Door Opener - 1/2 HP	480	520
Electric Water Heater - 40 Gallon	4000	-
DIY/Job Site		
Quartz Halogen Work Light	1000	-
Airless Sprayer - 1/3 HP	600	1200
Reciprocating Saw	960	960
Electric Drill - 1/2 HP	1000	1000
Circular Saw - 7 1/4”	1500	1500
Miter Saw - 10”	1800	1800
Planer/Jointer - 6”	1800	1800
Table Saw/Radial Arm Saw - 10”	2000	2000
Air Compressor - 1-1/2 HP	2500	2500

*Wattages listed are approximate only. Check tool or appliance for actual wattage.

SPECIFICATIONS

Maximum Surge Watts . . . . . .8,500 watts
Continuous Wattage Capacity . . . . . .5,500 watts
Power Factor 1.0
Rated Maximum Continuous AC Load Current:
At 120 Volts . . . . . .45.8 Amps
At 240 Volts . . . . . .22.9 Amps
Phase 1–phase
Rated Frequency . . . . . .60 Hertz
Fuel Tank Capacity . . . . . 5 U.S. gallons
Shipping Weight . . . . . 153 lbs.

GENERAL MAINTENANCE RECOMMENDATIONS

The Owner/Operator is responsible for making sure that all periodic maintenance tasks are completed on a timely basis; that all discrepancies are corrected; and that the unit is kept clean and properly stored. **Never operate a damaged or defective generator.**

Engine Maintenance

See engine owner's manual for instructions.

CAUTION! Avoid prolonged or repeated skin contact with used motor oil. Used motor oil has been shown to cause skin cancer in certain laboratory animals. Thoroughly wash exposed areas with soap and water.
KEEP OUT OF REACH OF CHILDREN. DON'T POLLUTE. CONSERVE RESOURCES. RETURN USED OIL TO COLLECTION CENTERS.

Generator Maintenance

Generator maintenance consists of keeping the unit clean and dry. Operate and store the unit in a clean dry environment where it will not be exposed to excessive dust, dirt, moisture or any corrosive vapors. Cooling air slots in the generator must not become clogged with snow, leaves or any other foreign material.

NOTE: Do Not use a garden hose to clean generator. Water can enter engine fuel system and cause problems. In addition, if water enters generator through cooling air slots, some of the water will be retained in voids and cracks of the rotor and stator winding insulation. Water and dirt buildup on the generator internal windings will eventually decrease the insulation resistance of these windings.

To Clean the Generator

- Use a damp cloth to wipe exterior surfaces clean.
- A soft bristle brush may be used to loosen caked on dirt or oil.
- A vacuum cleaner may be used to pick up loose dirt and debris.
- Low pressure air (not to exceed 25 psi) may be used to blow away dirt. Inspect cooling air slots and opening on generator. These openings must be kept clean and unobstructed.

STORAGE

The generator should be started at least once every seven days and allowed to run at least 30 minutes. If this cannot be done and you must store the unit for more than 30 days, use the following guidelines to prepare it for storage.

Generator Storage

- Clean the generator as outlined in "To Clean the Generator."
- Check that cooling air slots and openings on generator are open and unobstructed.

CAUTION! Storage covers can be flammable. **Do Not** place a storage cover over a hot generator. Let the unit cool for a sufficient time before placing the cover on the unit.

Engine Storage

See engine owner's manual for instructions.

Other Storage Tips

- Always store unit with fuel shut off valve in the "**Off**" position (Figure 4, earlier).
- To prevent gum from forming in fuel system or on essential carburetor parts, empty entire contents of both supplied fuel stabilizer containers into fuel tank and fill with fresh gasoline. Run the unit for several minutes to circulate the additive through the carburetor. The unit and fuel can then be stored for up to 24 months. Additional fuel stabilizer can be purchased locally.
- Fuel tank may swell in storage if vent is closed. When storing generator with fuel in the tank, make sure the vent knob is turned fully counter-clockwise.
- Store unit in clean and dry area.

NOTES

TROUBLESHOOTING

Problem	Cause	Solution
Engine is running, but no AC output is available.	1. Circuit breaker is open. 2. Poor connection or defective cord set. 3. Connected device is bad. 4. Fault in generator.	1. Reset circuit breaker. 2. Check and repair. 3. Connect another device that is in good condition. 4. Contact Generac service facility.
Engine runs good but bogs down when loads are connected.	1. Short circuit in a connected load. 2. Generator is overloaded. 3. Engine speed is too slow. 4. Shorted generator circuit.	1. Disconnect shorted electrical load. 2. See "Don't Overload the Generator" on page 9. 3. Contact Briggs and Stratton service facility. 4. Contact Generac service facility.
Engine will not start; or starts and runs rough.	1. Run/Stop switch set to "**Stop**". 2. Dirty air cleaner. 3. Fuel valve is in the "**Off**" position. 4. Vent knob in fuel gauge is closed. 5. Quick connect in fuel line is disconnected. 6. Out of gasoline. 7. Stale gasoline. 8. Spark plug wire not connected to spark plug. 9. Bad spark plug. 10. Water in gasoline. 11. Overchoking. 12. Low oil level. 13. Excessively rich fuel mixture. 14. Intake valve stuck open or closed. 15. Engine has lost compression.	1. Set switch to "**Run**". 2. Clean or replace air cleaner. 3. Turn fuel valve to the "**On**" position. 4. Open vent knob in fuel gauge. 5. Reconnect quick connect in fuel line. 6. Fill fuel tank. 7. Drain gas tank and fill with fresh fuel. 8. Connect wire to spark plug. 9. Replace spark plug. 10. Drain gas tank; fill with fresh fuel. 11. Put choke lever to "**Run**" position. 12. Fill crankcase to proper level. 13. Contact Generac service facility. 14. Contact Generac service facility. 15. Contact Generac service facility.
Engine shuts down during operation.	1. Out of gasoline. 2. Fault in engine.	1. Fill fuel tank. 2. Contact Generac service facility.
Engine lacks power.	1. Load is too high. 2. Dirty air filter. 3. Engine needs to be serviced.	1. See "Don't Overload the Generator" on page 9. 2. Replace air filter. 3. Contact Generac service facility.
Engine "hunts" or falters.	1. Choke is opened too soon. 2. Carburetor is running too rich or too lean.	1. Move choke to halfway position till engine runs smoothly. 2. Contact Generac service facility.

SCHEMATIC

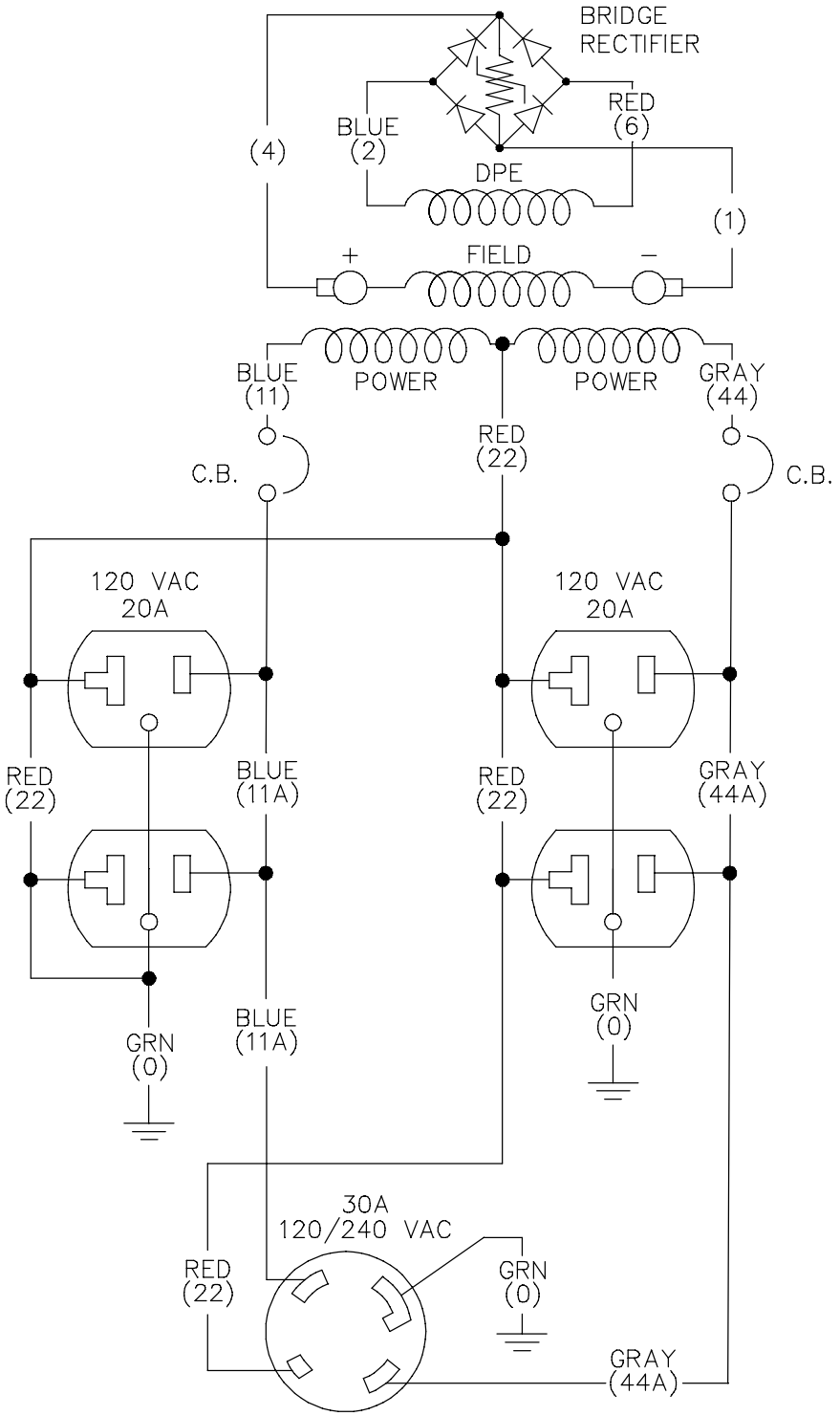

WIRING DIAGRAM

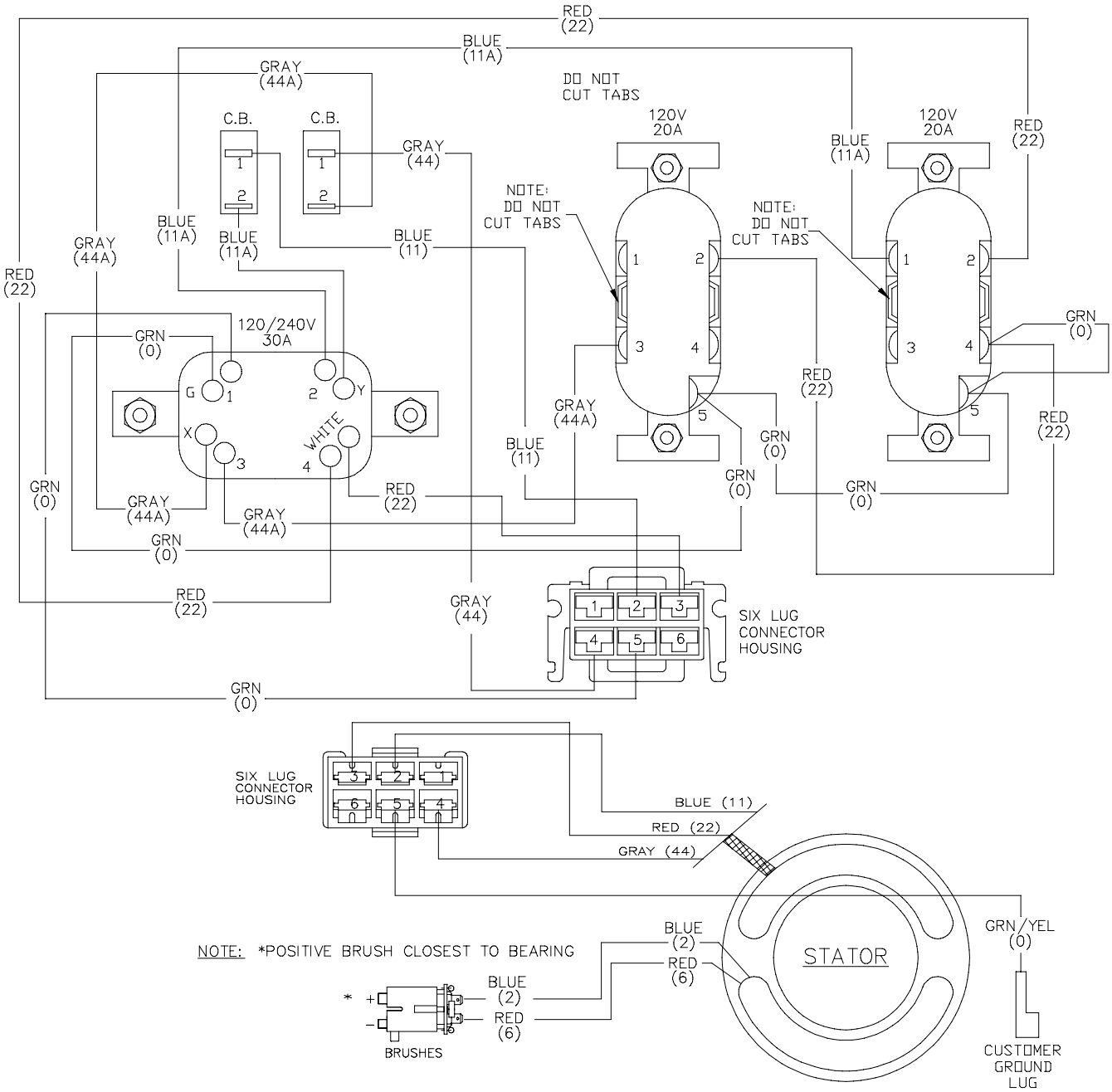

EXPLODED VIEW – MAIN UNIT

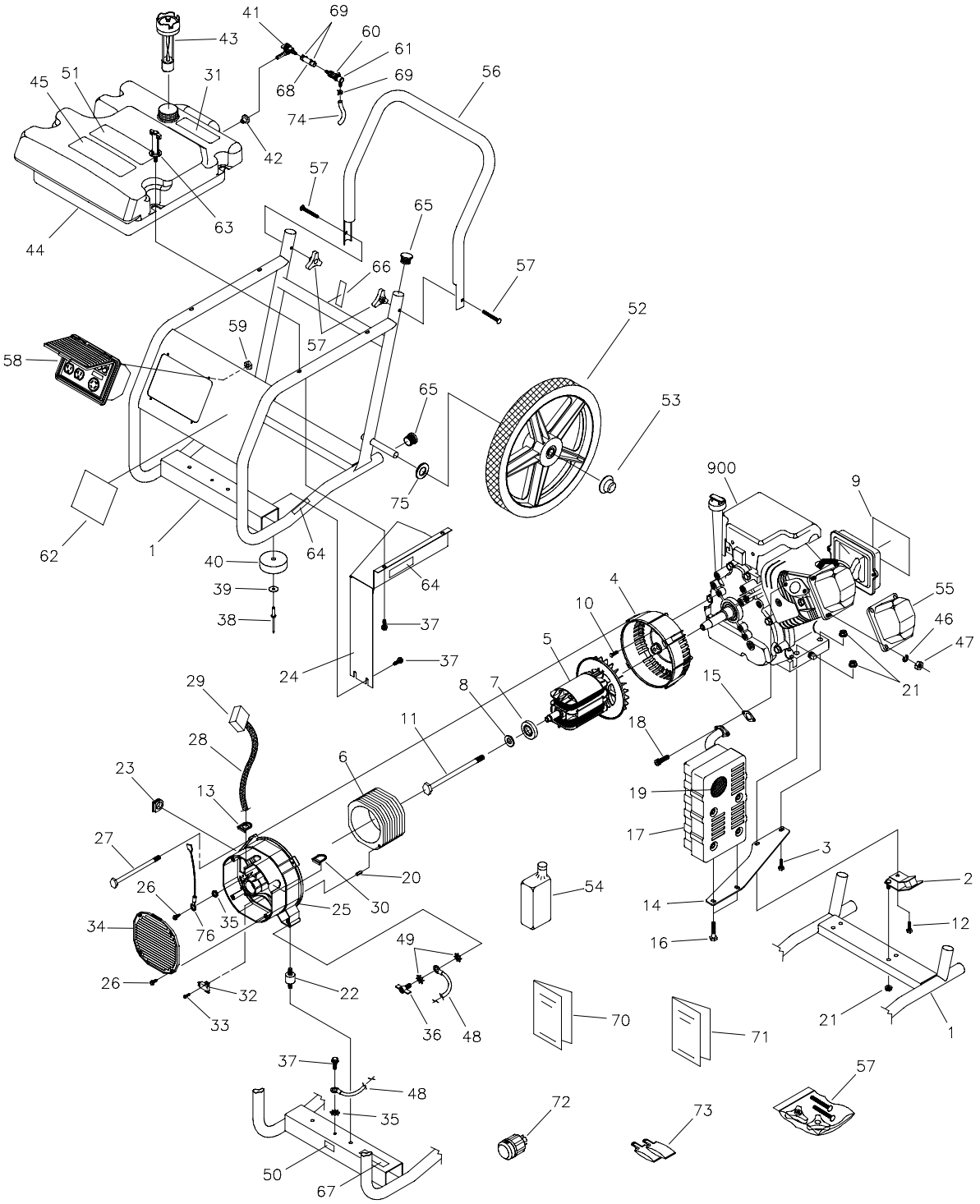

PARTS LIST – MAIN UNIT

Item	Part #	Qty	Description
1	A189457GS	1	FRAME
2	70642GS	2	MOUNT, Vibration 45°
3	84346GS	2	PPHMS, M8 - 1.25 x 35
4	66365GGS	1	HOUSING, Engine Adapter
5	187746GS	1	ASSEMBLY, Rotor (Inclds Item 7)
6	187745GS	1	ASSEMBLY, Stator
7	65791GS	1	BEARING
8	96796GS	1	WASHER, M8 Flat
9	189635GS	1	DECAL, Cover Air Cleaner
10	86307GS	4	SCREW, 5/16-24 x 3/4 SEMS
11	99383GS	1	SCREW, 5/16-24 x 7-3/8
12	76222GS	1	PPHMS, M8 - 1.25 x 40
13	189127GS	1	GROMMET, Rubber
14	189009GS	1	BRACKET, Muffler
15	188551GS	1	GASKET, Exhaust
16	66476GS	2	SCREW, M6-1 x 12 w/Lock Washer
17	189008GS	1	MUFFLER
18	60706GS	2	SCREW, 5/16 - 18 x 3/4"
19	83083GS	1	SCREEN, Spark Arrest
20	81917GS	1	PIN, 4mm x 10 Roll
21	67989GS	9	NUT, Flange Serrated
22	85652GS	2	MOUNT, Vibration
23	67022GS	1	GROMMET, Rubber
24	J189011AGS	1	SHIELD, Heat
25	SRV66825DGS	1	CARRIER, Rear Bearing
26	74908GS	5	TAPTITE, M5-0.8 x 10
27	86308AGS	4	BOLT, M6-1 x 145mm Stator
28	84409GS	1	SLEEVING, Flexo, HW 1/2"X15"
29	22695GS	1	FASTEN, On Tab Housing 6P
30	84242GS	1	GROMMET, Plastic
31	188333GS	1	DECAL, Fuel Tank
32	91825GS	1	ASSEMBLY, Brush Holder
33	66849GS	2	TAPTITE, M5-0.8 x 16
34	B4871GS	1	COVER, Bearing Carrier
35	23762GS	2	WASHER, #10 Ext. Shakeproof
36	86494GS	1	SCREW, M6-1.0 x 16 Wing
37	B2153GS	5	SCREW, #10 Self Drilling
38	188194GS	2	BLIND RIVET
39	71693GS	2	WASHER, Flat
40	27007GS	2	MOUNT, Rubber Foot
41	80270GS	1	VALVE, Tank
42	78299GS	1	BUSHING, Plastic Tank
43	189420GS	1	CAP, Fuel Gauge
44	189397GS	1	TANK, Fuel, 5 Gallon (Includes Items 41 & 42)
45	189235GS	1	DECAL, Start Instructions
46	22097GS	4	WASHER, Lock
47	22127GS	4	NUT, 1/4-20
48	1435362 1GS	1	WIRE, Ground
49	26850GS	2	WASHER, M6 Shakeproof
50	B4986GS	1	DECAL, Ground, Green
51	92982GS	1	DECAL, Danger
52	189098GS	2	WHEEL, 14 x 1.75, 1/2" Hub
53	75402GS	2	PUSHNUT, 1/2"
54	BB3061GS	1	BOTTLE, Oil, 28 oz
55	187330GS	1	HOOD, Rocker Arm Cover
56	A188205GS	1	HANDLE
57	189456GS	1	KIT, Handle Fastening
58	189157GS	1	ASSEMBLY, Control Panel
59	189164GS	4	NUT, Palnut 3/16"
60	189117GS	1	QUICK CONNECT, Fuel, 1/4 Barb
61	189115GS	1	QUICK CONNECT, Fuel, 1/4 Barb
62	189634GS	1	DECAL, Logo
63	189114GS	4	KNOB, Fuel Tank Hold Down
64	77816GS	2	DECAL, Hot Muffler
65	189332GS	4	CAP PLUG, 1 - 1/4" O.D.
66	73054GS	1	DECAL, Shut-Off, Fuel
67	20566GS	1	DECAL, 1-800 #
68	189867AGS	1	HOSE, 1/4" x 51mm
69	48031CGS	4	CLAMP
70	189628GS	1	MANUAL, Owners
71	188826GS	1	MANUAL, Engine
72	43438GS	1	PLUG, 250V, 30A
73	189208GS	2	STABILIZER, 1oz Tube
74	189867BGS	1	HOSE, 1/4" x 159mm
75	49808GS	2	WASHER, M12 Flat
76	189521AGS	1	WIRE, Ground Panel
900	NSP	1	ENGINE

EXPLODED VIEW AND PARTS LIST – CONTROL PANEL

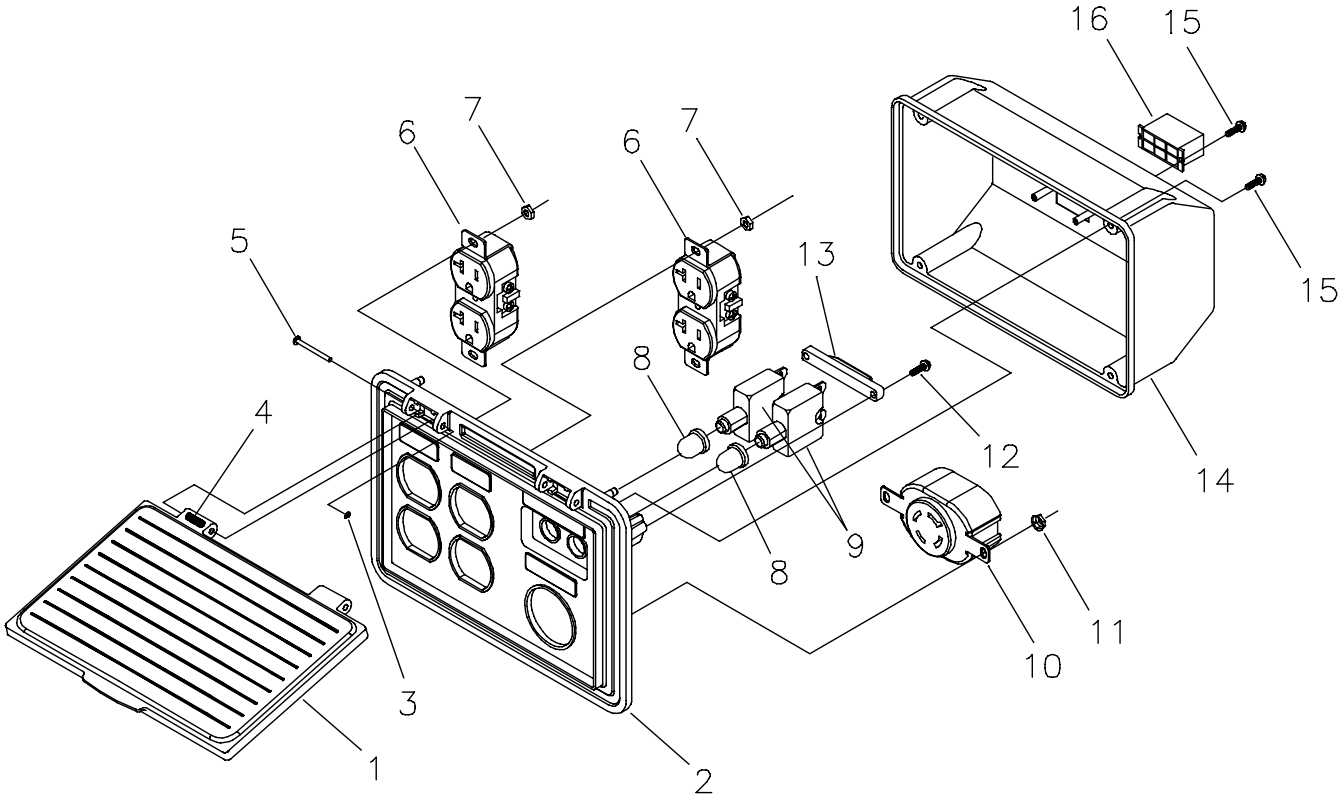

Item	Part #	Qty	Description
1	188914GS	1	COVER, Lid, Control Panel
2	188889GS	1	CONTROL PANEL, Compact
3	189167GS	2	CLIP, Hinge Pin Retainer
4	189182GS	2	SPRING, Hinge, Pin
5	189166GS	2	PIN, Hinge, Cover, Compact
6	68759GS	2	OUTLET, 120V, 20Amp, Duplex
7	189165GS	4	NUT, Palnut, Pushnut, 5/32
8	84198GS	2	CAP, Circuit Breaker
9	75207GS	2	CIRCUIT BREAKER
10	43437GS	1	OUTLET, 120/240 Locking, 30A
11	189164GS	2	NUT, Palnut, Pushnut, 3/16
12	84543CGS	2	SCREW, Phillips, Head 3.5 x 18
13	93857GS	1	BAR, Retaining
14	188890GS	1	COVER, Back, Control Panel
15	82308GS	6	SCREW, Self Tapping, STC 3x
16	22694GS	1	HOUSING, Receptacle

NOTES

LIMITED WARRANTY
FOR PORTABLE GENERATORS

GENERAC PORTABLE PRODUCTS, LLC (hereafter referred to as the COMPANY) warrants to the original purchaser that the components in its portable generator will be free from defects in materials or workmanship for the items and period set forth below from the date of original purchase. This warranty does not include the gasoline engine when furnished or attached because such engine is covered solely by the engine manufacturer's warranty. Starting batteries are not warranted by the COMPANY. The term "original purchaser" means the person for whom the generator is originally purchased. This warranty is not transferable and applies only to portable generators driven by an overhead valve engine.

Warranty Schedule:

	Consumer*	**Commercial***
Engine	Warranted solely by the engine manufacturer	
All other parts	2 years (2nd year parts only)	1 Year

With the exception of European Community Countries, all units bound for export shall be warranted for One (1) Year in Consumer applications, and 90 days in Commercial applications as defined below.

***NOTE: For the purpose of this warranty "consumer use" means personal residential household use by original purchaser. This warranty does not apply to units used for prime power in place of utility. "Commercial Use" means all other uses, including rental, construction, commercial and income producing purposes. Once a generator has experienced commercial use, it shall thereafter be considered a commercial use generator for the purposes of this warranty.**

During the warranty period, the COMPANY will, at is option, repair or replace any part which, upon examination by the COMPANY, is found to be defective under normal use and service**. All transportation costs under warranty, including return to the factory if necessary, are to be borne by the purchaser and prepaid by the purchaser. This warranty does not cover normal maintenance and service and does not apply to a generator set, alternator, or parts which have been subjected to improper or unauthorized installation or alteration, misuse, negligence, accident, overloading, overspeeding, improper maintenance, repair or storage so as, in the COMPANY's judgement, to adversely affect its performance and reliability.

****NORMAL WEAR: As with all mechanical devices, the generator needs periodic parts service and replacement to perform well. This warranty will not cover repair when normal wear has exhausted the life of a part or generator.**

THERE IS NO OTHER EXPRESS WARRANTY. THE COMPANY HEREBY DISCLAIMS ANY AND ALL IMPLIED WARRANTIES, INCLUDING BUT NOT LIMITED TO THOSE OF MERCHANTABILITY AND FITNESS FOR A PARTICULAR PURPOSE TO THE EXTENT PERMITTED BY LAW. THE DURATION OF ANY IMPLIED WARRANTIES WHICH CANNOT BE DISCLAIMED IS LIMITED TO THE TIME PERIOD AS SPECIFIED IN THE EXPRESS WARRANTY. LIABILITY FOR CONSEQUENTIAL, INCIDENTAL OR SPECIAL DAMAGES UNDER ANY AND ALL WARRANTIES IS EXCLUDED. THE COMPANY ALSO DISCLAIMS ANY RESPONSIBILITY FOR INCIDENTAL OR CONSEQUENTIAL DAMAGES, SUCH AS THE LOSS OF TIME OR THE USE OF THE POWER EQUIPMENT, OR ANY COMMERCIAL LOSS DUE TO THE FAILURE OF THE EQUIPMENT: AND ANY IMPLIED WARRANTIES ARE LIMITED TO THE DURATION OF THIS WRITTEN WARRANTY.

Some states do not allow limitations on how long an implied warranty lasts, or the exclusion or limitation of incidental or consequential damages, so the above limitations or exclusions may not apply to you. This warranty gives you specific legal rights and you may also have other rights, which vary from state to state.

For service, see your nearest COMPANY authorized warranty service facility or call 1-877-544-0982. Or look on the internet at www.generac-portables.com. Warranty service can be performed only by a COMPANY authorized service facility. This warranty will not apply to service at any other facility. At the time of requesting warranty service, evidence of original purchase date must be presented.

GENERAC PORTABLE PRODUCTS, L.L.C.
Jefferson, Wisconsin U.S.A.